Novara Semi-Recessed Square Basin

Product Code: **NOBSRS**

The Novara's straight edge design means it can be fitted flush up against the back wall, making it a perfect solution for smaller bathrooms. This semi-recessed basin is designed to sit on top of a vanity unit or counter bench top & hang over the vanity space at the front.

- AS/NZ Standard AS1172.4.2019
- Semi-recessed basin
- Taphole
- Overflow
- Chrome pop-up plug and waste included

FRONT VIEW

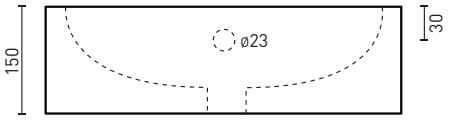

TOP VIEW

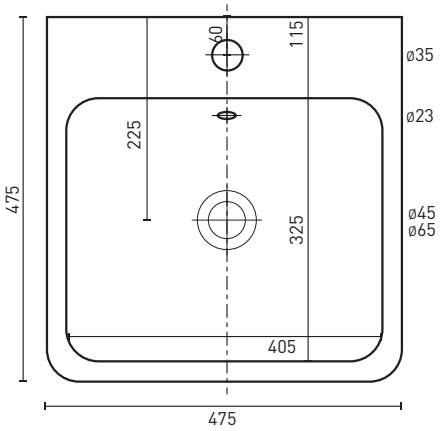

SIDE VIEW

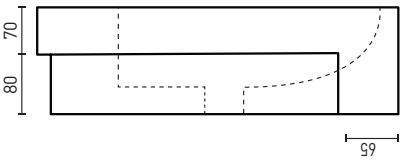

PRODUCT SPECIFICATIONS

Colour:	High gloss white
Material:	Premium vitreous china
Length:	475mm
Width:	475mm
Height:	150mm
Capacity:	6L
Basin Type:	Semi-recessed
Net Weight:	15kg
Warranty:	10 years* (refer to decina.com.au)

OPTIONAL ACCESSORIES

☑ 32 X 40mm Quattro pop-up basin waste - chrome ***WA005***

☑ Overflow ring - PVV chrome ***WA010,***
brass matte black ***WA011***

DECINA
DISCOVER INDULGENCE

DECINA.COM.AU 1300 DECINA

*Warranty T&Cs apply, visit decina.com.au Decina reserves the right to change specifications without notice. Due to manufacturing tolerances dimensions may vary +/- 5mm.
We recommend installation does not start until after delivery. Please confirm all particulars prior to purchase, call 1300 DECINA or visit decina.com.au