LINDO 1300

Freestanding Bath

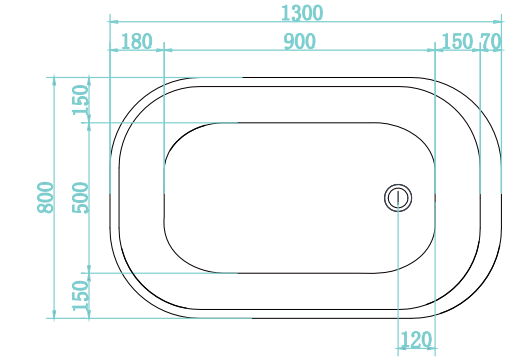

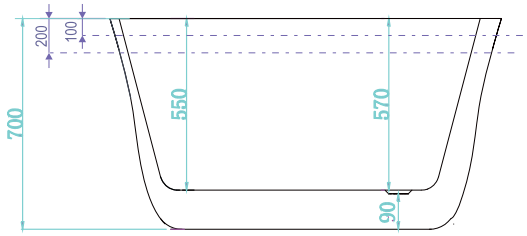

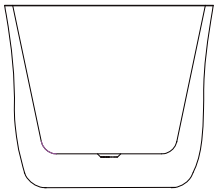

LINDO 1300 FREESTANDING SOAKER BATH

The Lindo is a modern, soaker style freestanding bath. The increased internal depth, allows for full body immersion and bathing comfort, while the shorter length saves on bathroom space. The reduced internal surface area of the bath means water temperature is maintained for longer.

Model Code
- LI1300W

SIZE (l)x(w)x(h)
- 1300 x 800 x 700 mm

CAPACITY BELOW BATH RIM (APPROX.)
- 100mm ~ 300 Litres
- 200mm ~ 260 Litres

NET WEIGHT
- 48 Kg

KEY FEATURES
- Rectangle soaker style freestanding bath
- Exclusive Decina design
- Adjustable self supporting feet for easy installation
- Extra depth for full body submersion
- Made to AS/NZ standard: 2023/1995
- High gloss white
- Scratch resistant
- Resistant to harsh chemical cleaners
- End waste position
- Plug & waste not included

MATERIAL
- Premium Sanitary Grade Acrylic

WARRANTY:
- Ten year warranty -
  Conditions apply please see website for details

Design and specifications depicted are subject to change without notice. Dimensions are nominal, it is strongly recommended installation does not occur until after delivery. Please confirm all particulars with your sales consultant prior to purchase. Visit www.decina.com.au or call customer service 1300 332 462.

DECINA
DISCOVER INDULGENCE